DISTRIBUTION NETWORK SPECIFICATIONS
(No Scale)

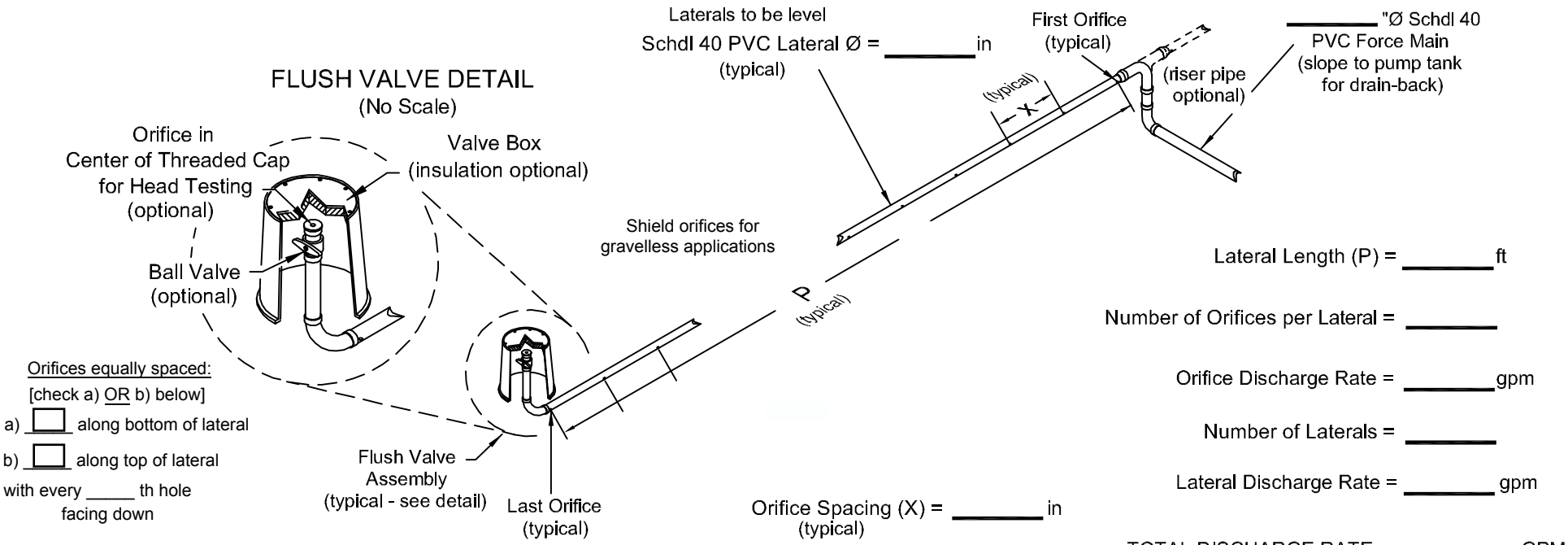

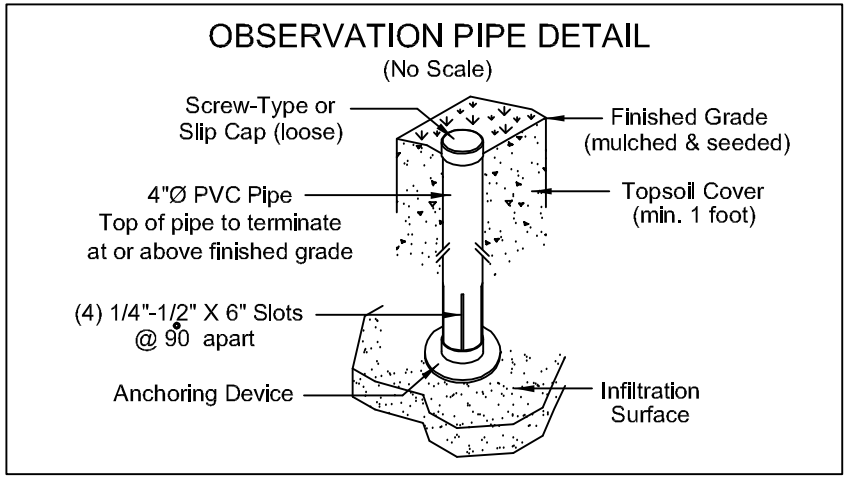

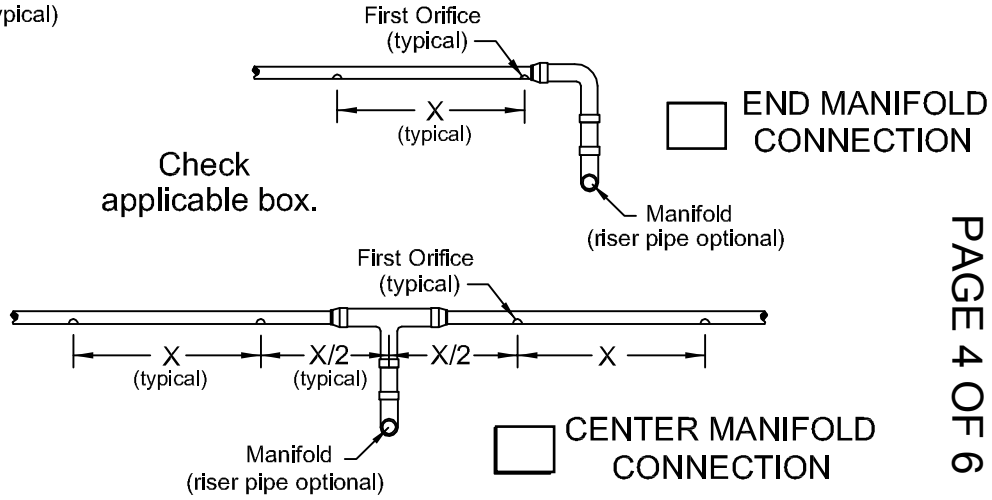

Check applicable box.

☐ END MANIFOLD CONNECTION

☐ CENTER MANIFOLD CONNECTION

Reset Page