DISTRIBUTION NETWORK SPECIFICATIONS
(No Scale)

FLUSH VALVE DETAIL
(No Scale)

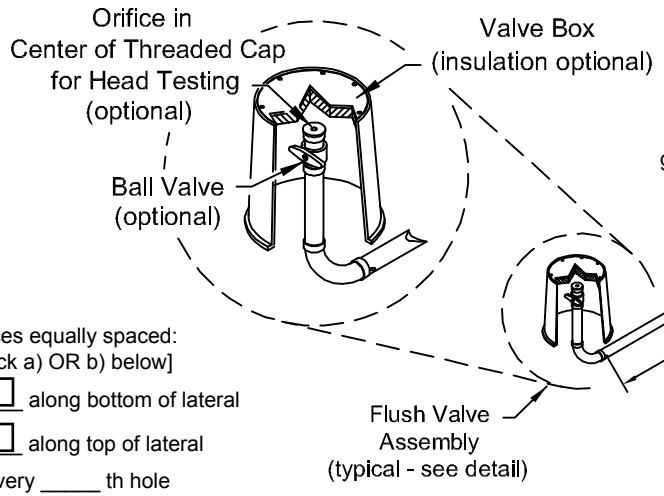

Orifices equally spaced:
[check a) OR b) below]

a) _____ along bottom of lateral

b) _____ along top of lateral

with every _____ th hole
facing down

LATERAL INVERT ELEVATION = _____ ft
(typical)

Lateral Spacing
S = _____ ft

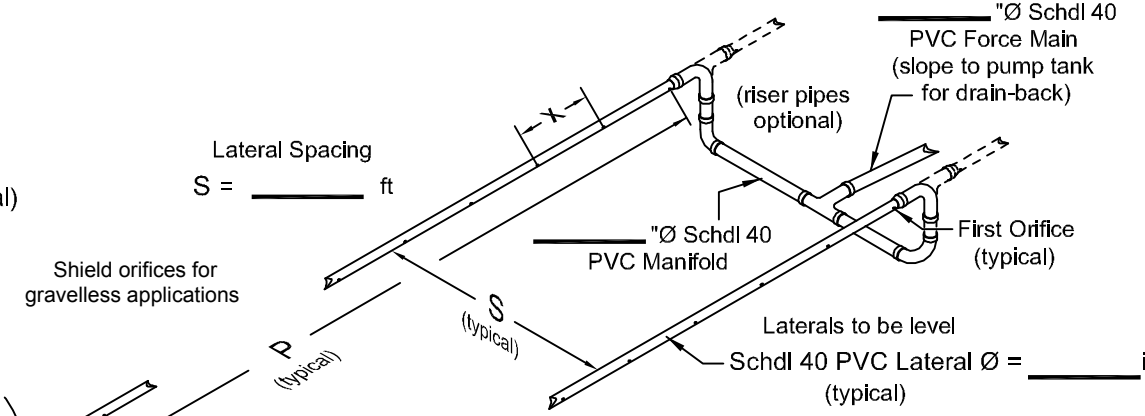

Laterals to be level

Schdl 40 PVC Lateral Ø = _____ in
(typical)

Lateral Length (P) = _____ ft

Number of Orifices per Lateral = _____

Orifice Discharge Rate = _____ gpm

Number of Laterals = _____

Lateral Discharge Rate = _____ gpm

TOTAL DISCHARGE RATE = _____ GPM

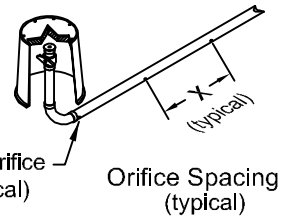

Orifices equally spaced
along bottom of lateral

Orifice Spacing (X) = _____ in
(typical)

Orifice Diameter = _____ in
(typical)

OBSERVATION PIPE DETAIL
(No Scale)

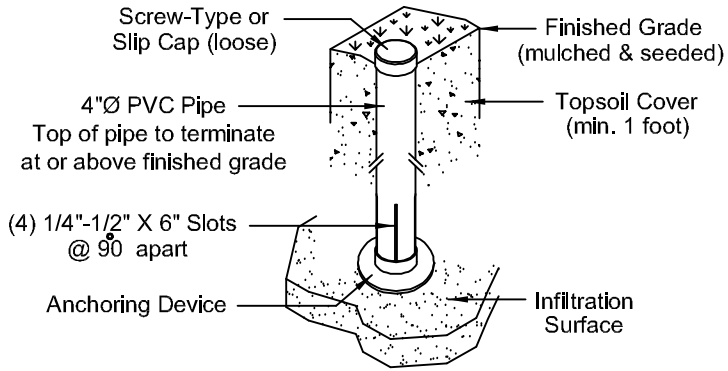

Check
applicable box.

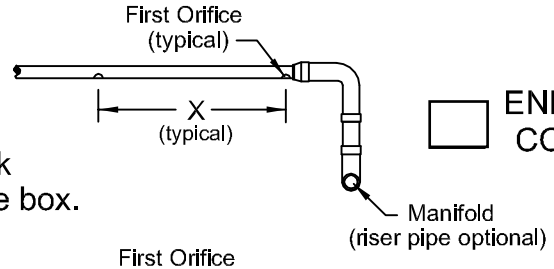

☐ END MANIFOLD CONNECTION

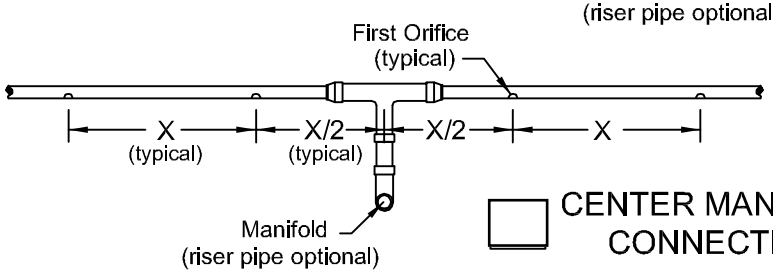

☐ CENTER MANIFOLD CONNECTION

Reset Page